BUSINESS INTELLIGENCE AND DATA ANALYTICS

University of Petra

Institute of Analytics
Recognized Programme

307307
Introduction to Deep Learning and Large Language Models

Content

- Introduction to Deep Neural Networks
  - CNNs
  - RNNs
  - The Transformer
- Contextual Word Embeddings
  - Introduction BERT
  - Introduction to HuggingFace and the Transformers Library

Introduction to Deep Learning

- Neural Networks have revolutionized artificial intelligence by enabling machines to learn from data in ways that mimic human neural processes.
- Deep neural networks (DNNs) are Neural Networks that are composed of multiple processing layers that can learn representations of data with multiple levels of abstraction.
- The power of deep learning comes from its ability to automatically discover complex patterns in raw data through the learning process, without requiring human engineers to manually specify all the knowledge needed by the computer system.

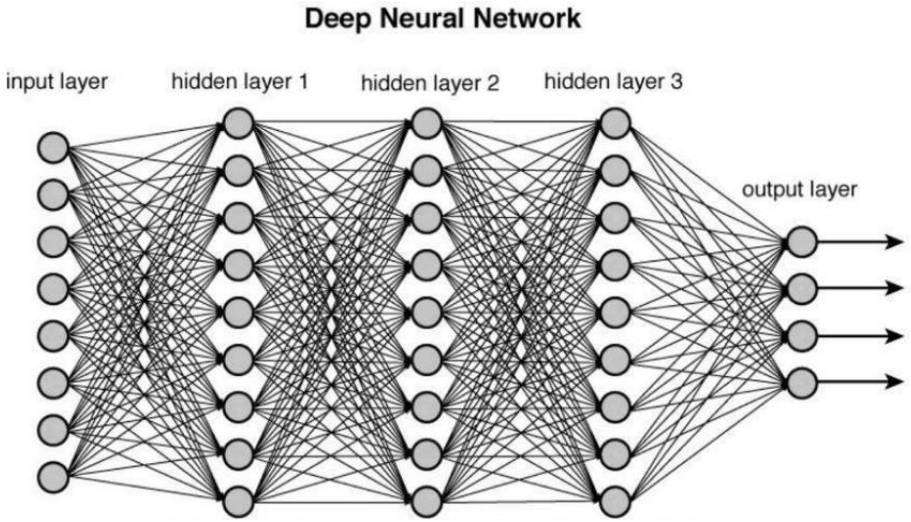

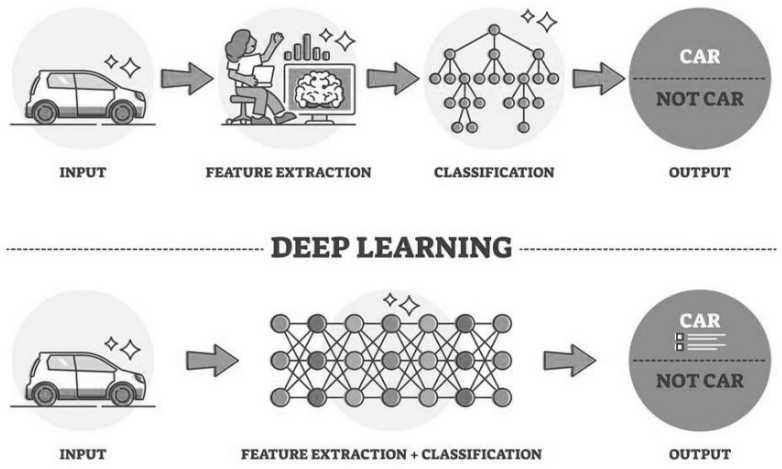

Introduction to Deep Learning

Fundamentals of Neural Networks

At their core, neural networks consist of:

1. **Neurons**: Mathematical functions that take inputs, apply weights, add a bias, and produce an output
2. **Layers**: Collections of neurons that process information in stages
3. **Activation Functions**: Non-linear functions that introduce complexity into the network
4. **Weights and Biases**: Parameters that are adjusted during training

The basic workflow involves:

- Forward propagation: Data flows through the network
- Loss calculation: The network's prediction is compared to the actual value
- Backpropagation: Errors are propagated backward to update weights
- Optimization: Weights are adjusted to minimize errors

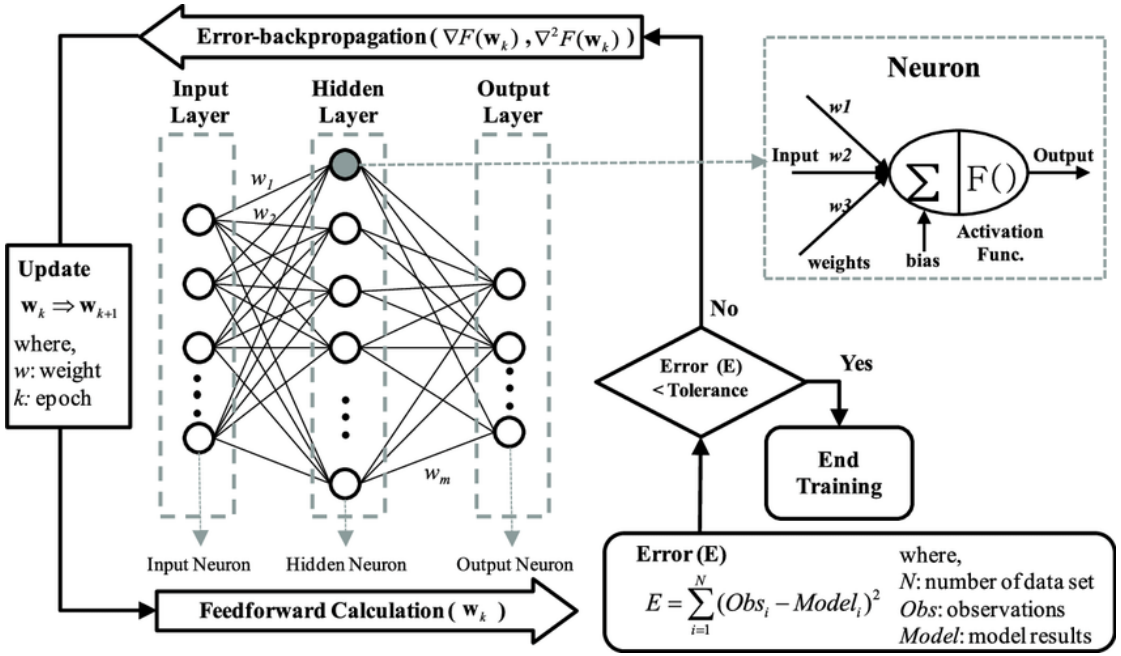

Convolutional Neural Networks

CNNs revolutionized image processing by introducing specialized layers that mimic how the visual cortex processes information.

Key components include:

1. **Convolutional Layers**: Apply filters that scan across the input data to detect patterns
2. **Pooling Layers**: Reduce dimensions while preserving important features
3. **Fully Connected Layers**: Connect every neuron to every neuron in adjacent layers

Instead of each neuron connecting to every pixel in an image (which would be computationally expensive), CNNs use:

- **Local connectivity**: Neurons connect only to nearby pixels
- **Parameter sharing**: The same filter is applied across the entire image

Business applications include:

- Product image recognition
- Visual quality control in manufacturing
- Document processing
- Customer behavior analysis in retail

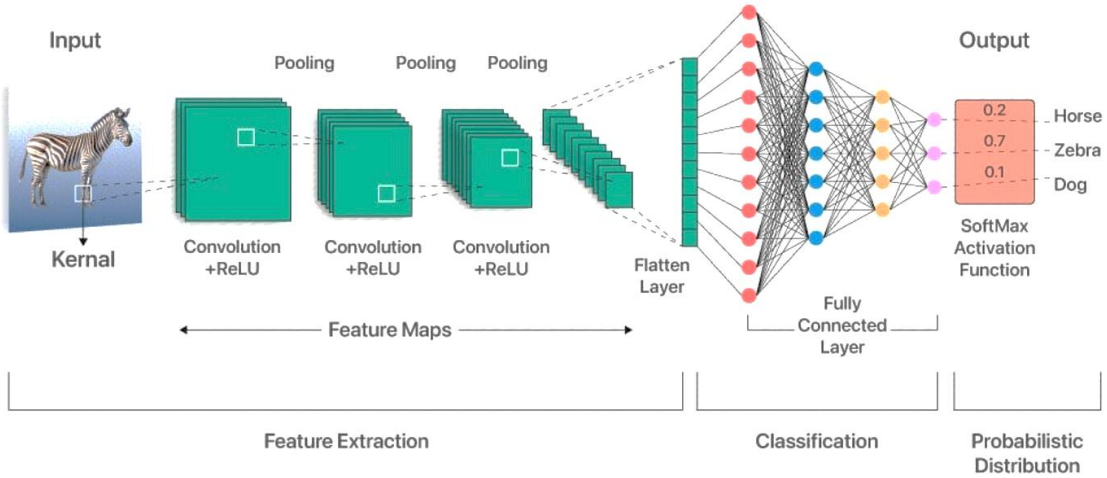

3_0	3_1	2_2	1	0
0_2	0_2	1_0	3	1
3_0	1_1	2_2	2	3
2	0	0	2	2
2	0	0	0	1

12.0	12.0	17.0
10.0	17.0	19.0
9.0	6.0	14.0

Recurrent Neural Networks (RNNs)

Unlike traditional neural networks, RNNs process sequences by maintaining a form of memory of previous inputs.

Key characteristics:

- **Time-dependent processing**: Output depends on both current and previous inputs
- **Shared parameters**: The same weights are applied at each time step
- **Memory**: Internal state acts as a form of short-term memory

However, basic RNNs struggle with long-term dependencies due to:

- **Vanishing gradient problem**: The influence of early inputs fades over time
- **Exploding gradient problem**: Gradients grow uncontrollably during training

Business applications include:

- Language Modeling & Text Generation – Predicting the next word in a sequence (e.g., autocomplete, chatbots).
- Machine Translation – Translating text from one language to another.
- Speech Recognition – Converting spoken language into written text.
- Stock Price Prediction – Predicting future stock or financial data.
- Weather Forecasting – Modeling temporal patterns in weather data.
- Patient Monitoring – Analyzing sequences of medical data (e.g., ECG signals).
- Music Generation – Creating sequences of musical notes.
- Fraud Detection – Detecting unusual sequences in financial transactions.
- Network Intrusion Detection – Monitoring patterns of activity over time.

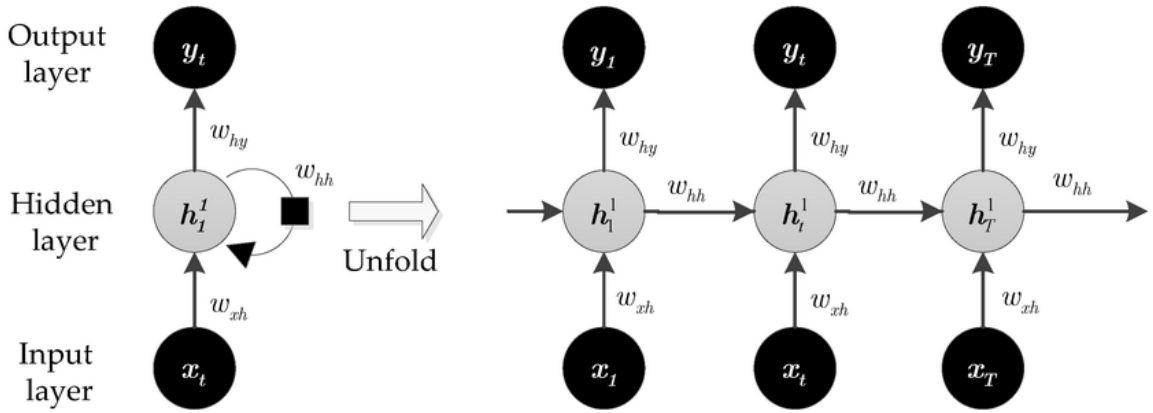

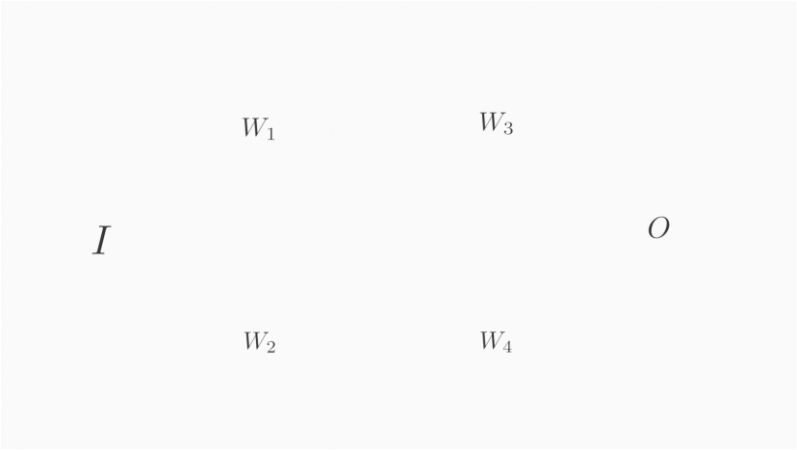

Transformers

Transformers – Architecture and Principles

What is a Transformer?

- A deep learning model that is designed to process sequential data, such as natural language, in a highly efficient and effective manner.
- Introduced in the paper *"Attention Is All You Need"* (Vaswani et al., 2017)
- Unlike traditional models that rely on sequential processing (like RNNs), transformers utilize a mechanism called self-attention, allowing them to analyze the entire input sequence at once.
- This capability enables them to capture complex relationships and dependencies between tokens in the sequence.

The transformer model consists of two main parts:

1. **Encoder:** The encoder processes the input sequence and generates a continuous representation of it. This representation captures the contextual information of the input tokens.
2. **Decoder:** The decoder takes the encoder's output and generates the final output sequence. It does this by predicting one token at a time, using the encoded representations and previously generated tokens.

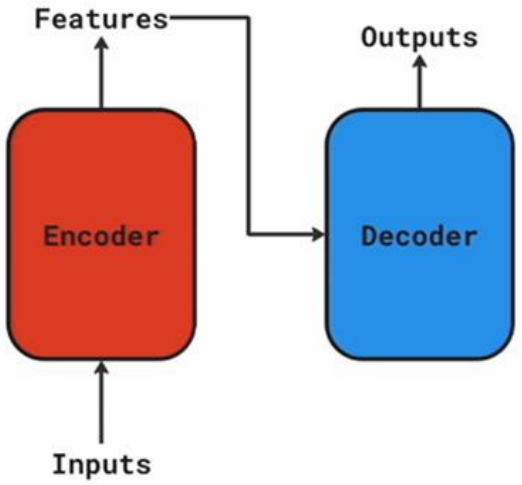

"Hello world" -> encoder -> knowledge -> -> decoder -> "Hola mundo"

Understanding LLMs

- At a high level, a transformer-based LLM is an autoregressive, **next-token predictor**.
- It takes a sequence of "tokens" (words or parts of words) as input and produces a prediction for what the next token should be.
- This prediction takes the form of a probability distribution.
- This newly selected token is appended to the sequence, and the entire process is repeated to generate the next token.
- This loop is repeated until the full response is outputted.
- The model processes text through a pipeline that involves the main components of the transformer:
  - **Tokenizer:** Breaks the input sentence into a list of tokens (words or parts of words).
  - **Embedding layer:** Converts each token into a high-dimensional vector representing its meaning in isolation.
  - **Transformer blocks:** The core of the model, consisting of multiple layers that progressively refine the meaning of the embedding vectors based on their context. Each transformer layer is composed of a self-attention and MLP (multi-layer perceptron) sub-layer.
  - **Unembedding layer & SoftMax:** Converts the final residual stream vector into a probability distribution over the entire vocabulary. The next token is sampled from this distribution.

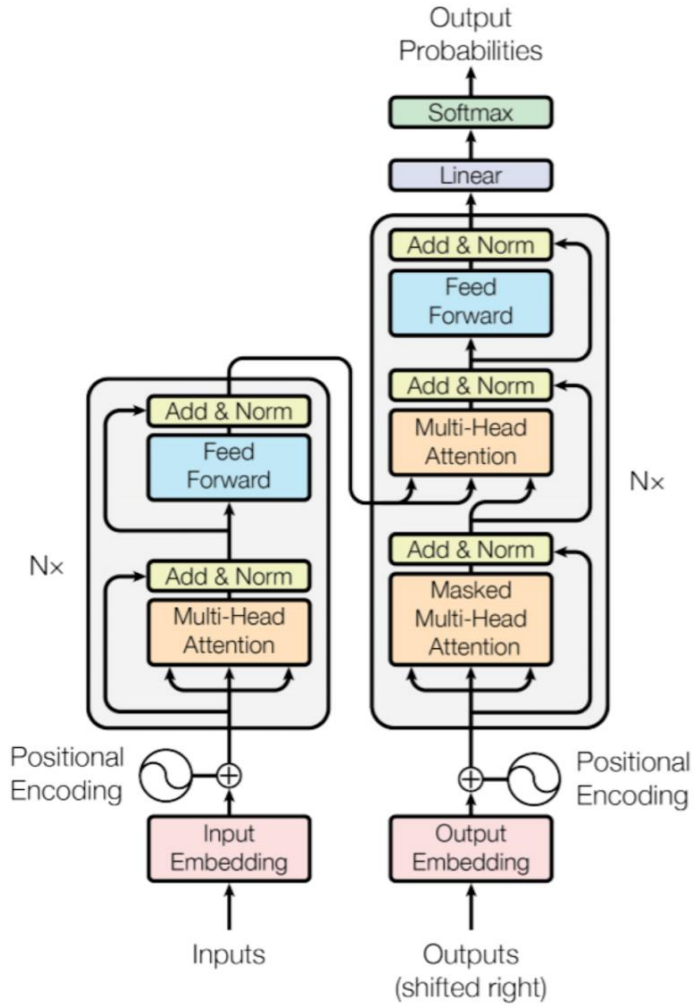

Context Aware Embeddings

Contextual Word Embeddings (BERT and GPT)

Key Innovation: Unlike static embeddings (Word2Vec, GloVe), contextual models generate **different vectors for the same word** depending on its context.

Approach

- Uses deep, pre-trained neural networks (often transformer-based)
- Embeddings are derived from entire sentences, capturing syntax and semantics dynamically

Examples

- **BERT - Bidirectional Encoder Representations from Transformers (2018)**: Transformer-based neural networks trained with masked language modeling and next sentence prediction
- **GPT - Generative Pre-training Transformer (2018):** Transformer-based unidirectional language model focused on generation.

Characteristics

- Embeddings are **context-sensitive** (e.g., “bank” in “river bank” vs. “savings bank”)
- Each word is embedded based on its role in the sentence.
- Embeddings vary for the same word depending on its position and meaning.
- Significantly improve performance on downstream NLP tasks.

BERT: Bidirectional Encoder Representations from Transformers

- Developed by Google in 2018
- A **pre-trained language model** based on the **Transformer encoder**
- Reads text **bidirectionally**, enabling deep contextual understanding

Key Ideas

- Uses only the **encoder** stack of the Transformer
- Pre-trained on large text corpora, then fine-tuned on specific tasks

Pretraining Objectives

- **Masked Language Modeling (MLM)**: Predict randomly masked words in a sentence
- **Next Sentence Prediction (NSP)**: Predict if one sentence follows another

Applications

- Sentiment Analysis
- Question Answering
- Named Entity Recognition
- Text Classification
- Semantic Search

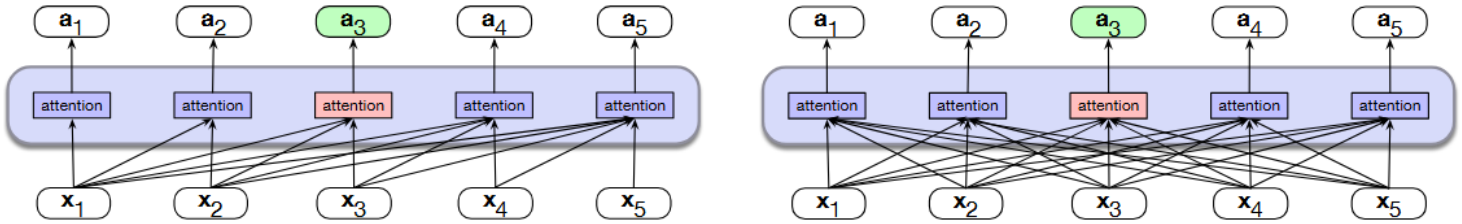

a) A causal self-attention layer

b) A bidirectional self-attention layer

More About BERT

Key Advantages

- Contextual embeddings: Word meanings change based on context
- Captures long-range dependencies
- Pre-trained on massive datasets → Transfer learning
- State-of-the-art performance on 11 NLP tasks when released

How BERT Works:

- **Multiple stacked encoder layers** with self-attention mechanisms
- **No decoders** - purely focused on understanding input
- **Captures relationships** between words and their context
- **Powerful context learning** - understands word relationships in sentences
- **Meaningful representations** - transforms text into useful numbers

Architecture Overview

```
Input: [CLS] The cat sat on the mat [SEP]
            ↓
    Token Embeddings
    Position Embeddings
    Segment Embeddings
            ↓
    Transformer Encoder (12 or 24 layers)
            ↓
    Contextual Representations
```

Key Components

- **[CLS]**: Classification token (sentence-level tasks)
- **[SEP]**: Separator token (between sentences)
- **Multi-head attention**: Allows model to focus on different positions
- **Feed-forward networks**: Process attention outputs

BERT's Training Data

Pre-training Foundation

- **Training corpus**: 3+ billion words
  - English Wikipedia
  - ~10,000 unpublished books
- **Clean, large-scale dataset** for comprehensive language learning
- **Pre-training approach** to learn language patterns and context

Training Objective 1 - Masked Language Modeling

Learning Through "Fill in the Blanks"

- **Random word masking**: Some words are hidden during training
- **Context-based prediction**: BERT predicts masked words using surrounding context
- **Example**: "I love eating _____ in my fruit salad" → "lemons"
- **Key benefit**: Learns word relationships and contextual understanding
- **Powerful concept**: Used in many other AI applications

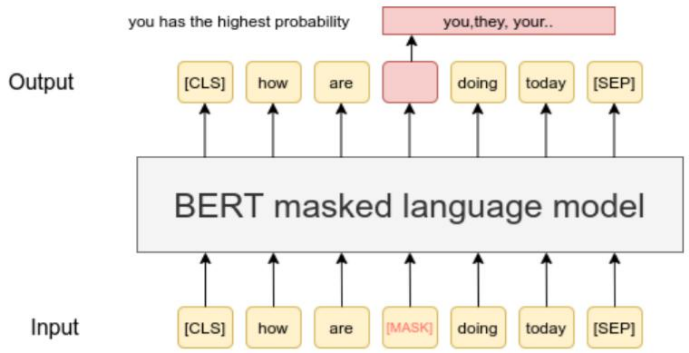

Training Objective 2 - Next Sentence Prediction

- **Title: Understanding Sentence Relationships**
- **Sentence pair analysis**: Given two sentences, determine if B follows A
- **Logical connection assessment**: Analyzes context and content
- **Example**:
  - A: "The cat climbed the tree"
  - B: "It was trying to catch a bird" ✓ (follows logically)
  - C: "The weather is nice today" ✗ (unrelated)
- **Note**: Later removed in newer models (MLM proved sufficient)

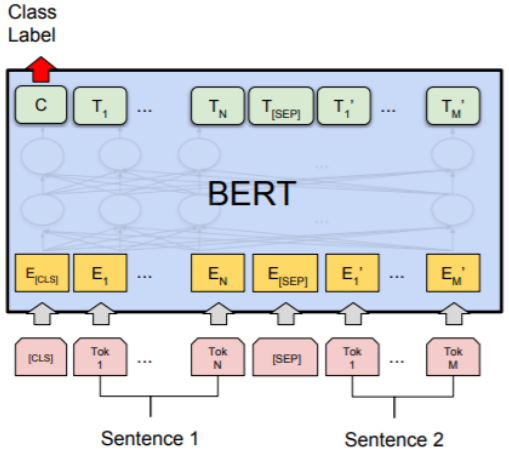

(a) Sentence Pair Classification Tasks: MNLI, QQP, QNLI, STS-B, MRPC, RTE, SWAG

BERT's Ideal Use Cases

Where BERT Excels

- **Text Classification**: Sentiment analysis, topic classification, spam detection
- **Named Entity Recognition**: Identifying people, organizations, locations, dates
- **Extractive Question Answering**: Finding answers within provided context
- **Semantic Similarity**: Measuring similarity between sentences/paragraphs
- **Key advantage**: Perfect for understanding tasks, not generation

Extractive Question Answering Example

How BERT Answers Questions:

- **Process**: Analyzes both context and question
- **Method**: Identifies start and end tokens of the answer
- **Example**:
  - Context: "Mount Everest is the highest mountain..."
  - Question: "What is the highest mountain?"
  - Answer: "Mount Everest" (extracted, not generated)
- **Important**: BERT extracts existing text, doesn't generate new content

BERT Variants

Common BERT Models

Model	Parameters	Layers	Hidden Size	Attention Heads
BERT-Base	110M	12	768	12
BERT-Large	340M	24	1024	16
DistilBERT	66M	6	768	12
RoBERTa	355M	24	1024	16
ALBERT	12M-235M	12-24	768-4096	12-64

Specialized Variants

- **BioBERT**: Biomedical text
- **SciBERT**: Scientific text
- **FinBERT**: Financial text
- **ClinicalBERT**: Clinical notes

Example: Print out BERT Embeddings

```
from transformers import BertTokenizer, BertModel
import torch
# Load pretrained BERT
tokenizer = BertTokenizer.from_pretrained('bert-base-uncased')
model = BertModel.from_pretrained('bert-base-uncased’)
# Sentence
sentence = "He went to the bank to deposit money.“
# Tokenize
inputs = tokenizer(sentence, return_tensors='pt’)
# Get outputs
with torch.no_grad():  # No training, just inference
    outputs = model(**inputs)
# Get the hidden states (embeddings)
embeddings = outputs.last_hidden_state  # Shape: (batch_size, sequence_length,
# (hidden_size)
print(embeddings.shape)  # Example output: torch.Size([1, 11, 768])
```

Open in Colab

GPT – Overview and Architecture

What is Generative **P**re-trained **T**ransformer (GPT)?

- A family of **Transformer-based language models** developed by OpenAI
- Uses only the **decoder stack** of the original Transformer architecture
- Trained with **causal (autoregressive) language modeling** to predict the next token
- Focuses on generating human-like text (unlike BERT's understanding focus)

Training Objective

- Predict the next token in a sequence

GPT Variants

- **GPT-1 (2018, 120M Parameters)**: Introduced the pretrain-then-finetune paradigm
- **GPT-2 (2019, 1.5B Parameters)**: Scaled up model size, trained on web-scale data, Last publicly available weights
- **GPT-3 (2020, 175B Parameters)**: Enabled in-context learning, 100x boost, ~800GB file size
- **GPT-4 (2023, ~1T parameters (estimated))**: Multimodal, stronger reasoning and generalization

Applications (Wide range of NLP tasks through text generation)

- Text generation (e.g., chat, storytelling, code)
- Summarization
- Translation
- Question answering
- Semantic search and reasoning tasks

GPT's Architecture Deep Dive

How GPT Works

- **Multiple stacked decoder layers** with self-attention mechanisms
- **No encoders** - purely focused on text generation
- **Unidirectional processing** - considers only left-side context
- **Next word prediction** based on preceding words
- **High-quality text generation** from learned context patterns
- **Contextual understanding** combined with text creation capability

GPT Training Data

Pre-training Foundation

- **Massive, diverse datasets** including:
  - Web pages
  - Books and articles
  - Billions of words total
- **Different datasets** for each GPT version
- **Large-scale exposure** to language patterns and context
- **Quality varies** but emphasis on diversity and scale

Causal Language Modeling

GPT's Single Training Objective

- **Core task**: Predict the next word in a sequence
- **Method**: Uses context from preceding words only
- **Example**: "I love drinking fresh ___" → "lemonade"
- **Key benefits**:
  - Learns word relationships and context
  - Develops language patterns
  - Enables coherent text generation
- **Simplicity**: No masked language modeling or next sentence prediction

GPT's Ideal Use Cases

Where GPT Excels

- **Text Generation**: Story creation, creative writing, conversations
- **Instruction Following**: Responding to prompts and commands
- **Translation**: Converting text between languages
- **Summarization**: Creating concise summaries of longer texts
- **Code Generation**: Programming assistance and code completion
- **Versatile Applications**: Any task involving text output

GPT vs BERT Architecture

Aspect	GPT	BERT
Architecture	Decoder-only	Encoder-only
Text Processing	Unidirectional (left-to-right)	Bidirectional
Primary Goal	Text generation	Text understanding
Context	Previous words only	All surrounding words
Use Cases	Generation tasks	Classification/extraction

What is Hugging Face? 🤔

- **A company and a community platform** focused on democratizing Artificial Intelligence, especially Natural Language Processing (NLP) and Machine Learning (ML).
- Often called the "**GitHub for Machine Learning**."
- **Mission**: To make state-of-the-art ML models, datasets, and tools accessible to everyone.
- Started in 2016, initially with a chatbot app, then pivoted to open-source ML.

What does hugging face provide?

1. **Accessibility**: Provides easy access to thousands of pre-trained LLMs.
2. **Standardization**: Offers standardized tools and interfaces for working with different models.
3. **Collaboration**: Fosters a vibrant community for sharing models, datasets, and knowledge.
4. **Innovation**: Accelerates research and development in the LLM field.
5. **Ease of Use**: Simplifies complex ML workflows, from data preparation to model deployment.

Core Components of the Hugging Face Ecosystem

- **Hugging Face Hub**:
  - The central place to find, share, and collaborate on models, datasets, and ML applications (Spaces).
  - Over 1.7 million models, 75,000+ datasets!
- **Transformers Library**:
  - Python library providing thousands of pre-trained models for NLP, Computer Vision, Audio, and more.
  - Supports PyTorch, TensorFlow, and JAX.
  - Makes downloading, training, and using state-of-the-art models incredibly simple.
- **Datasets Library**:
  - Efficiently load and process large datasets.
  - Optimized for speed and memory, built on Apache Arrow.
  - Access to a vast collection of public datasets.
- **Tokenizers Library**:
  - Provides high-performance tokenizers crucial for preparing text data for LLMs.
  - Offers various tokenization algorithms and pre-trained tokenizers.

The Model Hub

Over 1,700,000+ Models Available

Popular Model Categories:

- **Text Generation**: GPT, LLaMA, Mistral, CodeLlama
- **Text Classification**: BERT, RoBERTa, DeBERTa
- **Question Answering**: BERT-based models
- **Translation**: T5, mT5, NLLB
- **Code Generation**: CodeT5, StarCoder
- **Multimodal**: CLIP, BLIP, LLaVA

Getting Started with Hugging Face

- Explore the Hub: huggingface.co
- Browse models, datasets, and Spaces.
- Install Libraries:

```
pip install transformers datasets tokenizers
accelerate gradio
```

- Try a Pipeline:

```
# Example: Sentiment Analysis

from transformers import pipeline

classifier = pipeline("sentiment-analysis")

result = classifier("Hugging Face is awesome!")

print(result)

# Example: Text Generation

generator = pipeline("text-generation")

output = generator("In a world of large language models,",
   max_length=50)

print(output)
```

Under the Hood

1. Automatic model selection
2. Tokenization handled
3. Inference optimization
4. Result formatting
5. Device management

Traditional Approach

1. Load tokenizer
2. Preprocess text
3. Load model
4. Run inference
5. Post-process results

... 50+ lines of code

Other Hugging face Pipelines

The Hugging Face `transformers` library supports a wide range of **pipelines**, each designed for a specific **natural language processing (NLP)** or **vision** task — so you can use powerful models without deep setup.

Pipeline Name	Task Description
"sentiment-analysis"	Classify sentiment (positive/negative)
"text-classification"	General text classification (multi-label or multi-class)
"zero-shot-classification"	Classify into labels **without training** on them
"text-generation"	Generate text (e.g., GPT models)
"text2text-generation"	Text-to-text tasks (e.g., summarization, translation)
"translation"	Translate between languages
"summarization"	Generate a summary of input text
"question-answering"	Extract answer from context
"fill-mask"	Predict missing word in a sentence (BERT-style)
"ner" (Named Entity Recognition)	Extract entities (like names, places, etc.)
"conversational"	Chatbot-style conversation
"sentence-similarity"	Measure similarity between two sentences
"token-classification"	Classify each token (used for NER, POS tagging, etc.)
"feature-extraction"	Extract embeddings/features from a model
"table-question-answering"	QA over structured data (tables)

➤ **Sentiment Analysis**

python Copy Edit

```python
pipeline("sentiment-analysis")("I love this!")
```

➤ **Summarization**

python Copy Edit

```python
pipeline("summarization")("Long article text goes here...")
```

➤ **Translation**

python Copy Edit

```python
pipeline("translation_en_to_fr")("This is amazing.")
```

➤ **Question Answering**

python Copy Edit

```python
qa = pipeline("question-answering")
qa({
    "question": "Where do pandas live?",
    "context": "Pandas are native to China and prefer bamboo forests."
})
```

To list all available pipelines in code:

python Copy Edit

```python
from transformers.pipelines import SUPPORTED_TASKS
print(SUPPORTED_TASKS.keys())
```

Open in Colab

Training LLMs

What is LLM Training?

- LLM Training is the process of teaching a neural network to understand, generate, and manipulate human language.
- It involves feeding the model vast amounts of text data.
- The model learns patterns, grammar, context, and even some level of "knowledge" from this data.
- The goal is to adjust the model's internal parameters (weights and biases) to perform specific language tasks effectively.
- Modern models have BILLIONS of parameters (numbers) to learn during the training process.

Essential Components of LLM Training

1. **Dataset**: Large corpus of text data (e.g., books, articles, websites). Quality, quantity, and diversity are crucial.
2. **Model Architecture**: The neural network structure, predominantly the Transformer architecture (with self-attention mechanisms).
3. **Loss Function**: A function that measures the difference between the model's predictions and the actual target values (e.g., cross-entropy for next-word prediction).
4. **Optimizer**: An algorithm that updates the model's parameters to minimize the loss function (e.g., Adam, SGD).

The General Training Loop

1. **Data Preparation**: Collecting, cleaning, and tokenizing the text data into a format the model can understand.
2. **Model Initialization**: Setting initial random values for the model's parameters.
3. **Forward Pass**: Feeding input data through the model to get predictions.
4. **Loss Calculation**: Comparing predictions to the actual data to quantify error using the loss function.
5. **Backward Pass (Backpropagation)**: Calculating gradients, which indicate how each parameter contributed to the error.
6. **Parameter Update**: Adjusting model parameters using the optimizer in the direction that reduces the loss.
7. **Iteration**: Repeating steps 3-6 for many batches of data over multiple epochs (passes through the entire dataset).

Main Training Phases

1. LLM Pretraining.
2. LLM Fine Tuning

Pre-training: Building the Foundation

- The initial, most resource-intensive training phase.
- Models are trained on massive, diverse datasets (e.g., Common Crawl, Wikipedia, books).
- The objective of this step is to learn general language understanding, grammar, common sense reasoning, and factual knowledge.
- Usually self-supervised (e.g., predicting masked words, next sentence prediction).
- Results in a **base model** with broad capabilities.
- Examples: GPT-3, BERT, Llama pre-training.

Fine-tuning: Specializing the Model

- Takes a pre-trained base model and further trains it on a smaller, task-specific dataset.
- The objective of this step is to adapt the general knowledge of the pre-trained model to perform well on a particular downstream task (e.g., medical question answering, legal document summarization).
- It requires significantly less data and computation than pre-training.
- Can also be used for instruction tuning (following prompts) or aligning with human preferences (RLHF).

Data: The Critical Ingredient

- **Quantity**: LLMs require vast amounts of text to learn effectively. "More data is better" is often true, up to a point.
- **Quality**: Clean, well-formatted, and coherent data leads to better models. Garbage in, garbage out.
- **Diversity**: Exposure to various styles, domains, and perspectives helps create more robust and less biased models.
- **Preprocessing**:
  - **Tokenization**: Breaking text into smaller units (words, sub-words).
  - **Normalization**: Standardizing text (e.g., lowercasing, removing special characters).
  - Creating input IDs, attention masks.

Model Architecture: The Transformer

- The dominant architecture for state-of-the-art LLMs.
- Key Innovations:
  - **Self-Attention Mechanism**: Allows the model to weigh the importance of different words in a sequence when processing information, capturing long-range dependencies.
  - **Positional Encodings**: Injects information about the position of tokens in the sequence.
  - **Encoder-Decoder Structures** (for some tasks) or **Decoder-Only Structures** (common for generation).
  - **Feed-Forward Networks**: Applied independently to each position

Computational Demands & Challenges

- **Hardware**: Requires powerful GPUs (Graphics Processing Units) or TPUs (Tensor Processing Units) for parallel computation.
- **Distributed Training**: Often necessary to train large models across multiple GPUs or machines, adding complexity.
- **Time**: Pre-training can take weeks or months, even with significant computational resources.
- **Cost**: Significant expenses for hardware, cloud computing, and energy consumption.
- **Memory**: Model parameters and activations require substantial memory. Techniques like mixed-precision training help.

Evaluating Trained LLMs

- **Perplexity**: Measures how well a probability model predicts a sample. Lower is better.
- **Task-Specific Metrics**:
  - **BLEU, ROUGE**: For translation and summarization (overlap with reference texts).
  - **Accuracy, F1-score**: For classification tasks (e.g., sentiment analysis).
- **Benchmarks**: Standardized datasets and tasks for comparing models (e.g., GLUE, SuperGLUE, MMLU).
- **Human Evaluation**: Assessing fluency, coherence, helpfulness, and harmlessness by human raters. Often crucial for real-world performance.

Ethical Considerations in Training

- **Bias Amplification**: Models can learn and perpetuate biases present in the training data (e.g., gender, racial, societal biases).
- **Harmful Content Generation**: Potential to generate misinformation, hate speech, or other harmful text.
- **Data Privacy**: Ensuring that sensitive information from training data is not memorized or leaked.
- **Environmental Impact**: Significant energy consumption of training large models.
- **Accessibility and Equity**: Ensuring benefits of LLMs are widely accessible.

LLM Training Details - More Recent Models & Considerations

Model (Version/Size)	Est. Data Size (Tokens)	Context Size (Max Tokens)	Est. GPUs / Compute	Est. Training Time	Est. Electricity / Carbon Footprint	Est. Training Cost
GPT-3 (Base models like Davinci)	~500 Billion - 1 Trillion (incl. C4, Wikipedia, Books, etc.)	2,048 (later models up to 4,096)	~10,000 V100 GPUs (for original run) / ~3.6M A100-equivalent hours (PaLM 540B reference)	~34 days (using 1,024 A100s, research estimate) - Several months (actual, unconfirmed)	~1,287 MWh (training) / ~552 tons CO_2eq (Patterson et al.)	$4.6M - $12M+ (compute, various estimates)
Llama 2 (All sizes)	2 Trillion	4,096	Reported 6,000 GPU-months (A100-80GB equivalent for the family) / 1.7M+ GPU hours for 70B	Jan 2023 - July 2023 (overall project, specific model run time shorter within this)	3.3M kWh (entire project) / 539 tons CO_2eq (training, 100% offset by Meta)	Significant (part of Meta's AI investment)
BLOOM (176B)	366 Billion (1.6 TB)	2,048	384 A100 GPUs	~3.5 - 4 months	~433 MWh (training) / ~25-55 tons CO_2eq (trained in France, low-carbon energy)	~$2M - $5M (compute, public estimates)

LLM Training Details - More Recent Models & Considerations

Model (Version/Size)	Est. Data Size (Tokens)	Context Size (Max Tokens)	Est. GPUs / Compute	Est. Training Time	Est. Electricity / Carbon Footprint	Est. Training Cost
GPT-4	Not officially disclosed (speculated >> GPT-3, likely multi-trillion)	8,192 (GPT-4-8k) & 32,768 (GPT-4-32k); GPT-4 Turbo: 128,000	Not officially disclosed (speculated tens of thousands of A100s/H100s)	~5-6 months (speculative estimates)	Not disclosed (Expected to be significantly higher than GPT-3; estimates range from 20,000-78,000 MWh & thousands of tons CO_2eq for comparable efforts)	Est. >$60M - $100M+ (compute, speculative)
Llama 3 (Instruct models)	>15 Trillion (for the Llama 3 family)	8,192 (some reports suggest up to 128k for future/experimental versions)	Significant clusters of H100s (e.g., Meta mentioned two 24k H100 clusters)	~3 days (8B), ~17 days (70B), ~97 days (est. for 400B+ on 16k H100s)	Llama 3.1 405B est. ~11 GWh. Carbon footprint not yet fully disclosed, but Meta aims for net-zero operations.	Very High (part of Meta's large AI infrastructure investment)
Gemini 1.0 (Pro/Ultra)	Not officially disclosed (multimodal, likely vast & diverse datasets)	32,768 (Gemini 1.0 Pro); Gemini 1.5 Pro: 1 Million (up to 10M experimental)	Trained on Google's TPU v4 and v5e pods (thousands to tens of thousands of TPUs)	Not publicly disclosed (likely months)	Not disclosed. Google emphasizes efficiency & use of renewable energy. Gemini 1.0 was reported to be more efficient than some predecessors.	Very High (part of Google DeepMind's core AI efforts)

Fine-Tuning Large Language Models (LLMs)

What is Fine-Tuning?

- **Pre-training Phase**
  - Trained on large corpus using Masked Language Modeling (MLM) and Next Sentence Prediction (NSP)
- **Fine-Tuning Phase**
  - Fine-tuning is the process of continuing the training of a pretrained LLM on a smaller, task-specific dataset.
  - The objective is to specialize the model for a particular use case or domain.
- **Why Fine Tune LLMs?**
  1. Improve performance on specific tasks.
  2. Inject domain-specific knowledge (legal, medical, financial, etc.).
  3. Adapt to company-specific language or tone.
  4. Reduce inference cost by limiting model size and scope.
- **Use Cases of BERT Fine-Tuning**
  - Customer Support Chatbots (trained on company FAQs).
  - Legal Document Analysis.
  - Scientific Paper Summarization.
  - Code Assistants for specific frameworks.
  - Sentiment classification for product reviews.

Typical LLM Fine Tuning Workflow

1. Choose a Pre-trained Model

Pick a base model from Hugging Face (e.g., distilbert-base-uncased for classification or gpt2 for text generation).

2. Prepare Your Dataset

Format your data appropriately. Common formats:

- For classification: CSV with text and label columns.
- For generation: Text file or JSON with prompt and completion.

3. Tokenize the Data

Convert text into tokens the model understands using a tokenizer.

4. Define Training Arguments

Set training parameters like learning rate, batch size, and number of epochs.

5. Train the Model

Use a trainer to fine-tune the model on your dataset.

6. Evaluate & Save

Check performance and save the model for future use.

7. Share (Optional):

- Push your fine-tuned model back to the Model Hub.
- Create a demo in Hugging Face Spaces.

Open in Colab